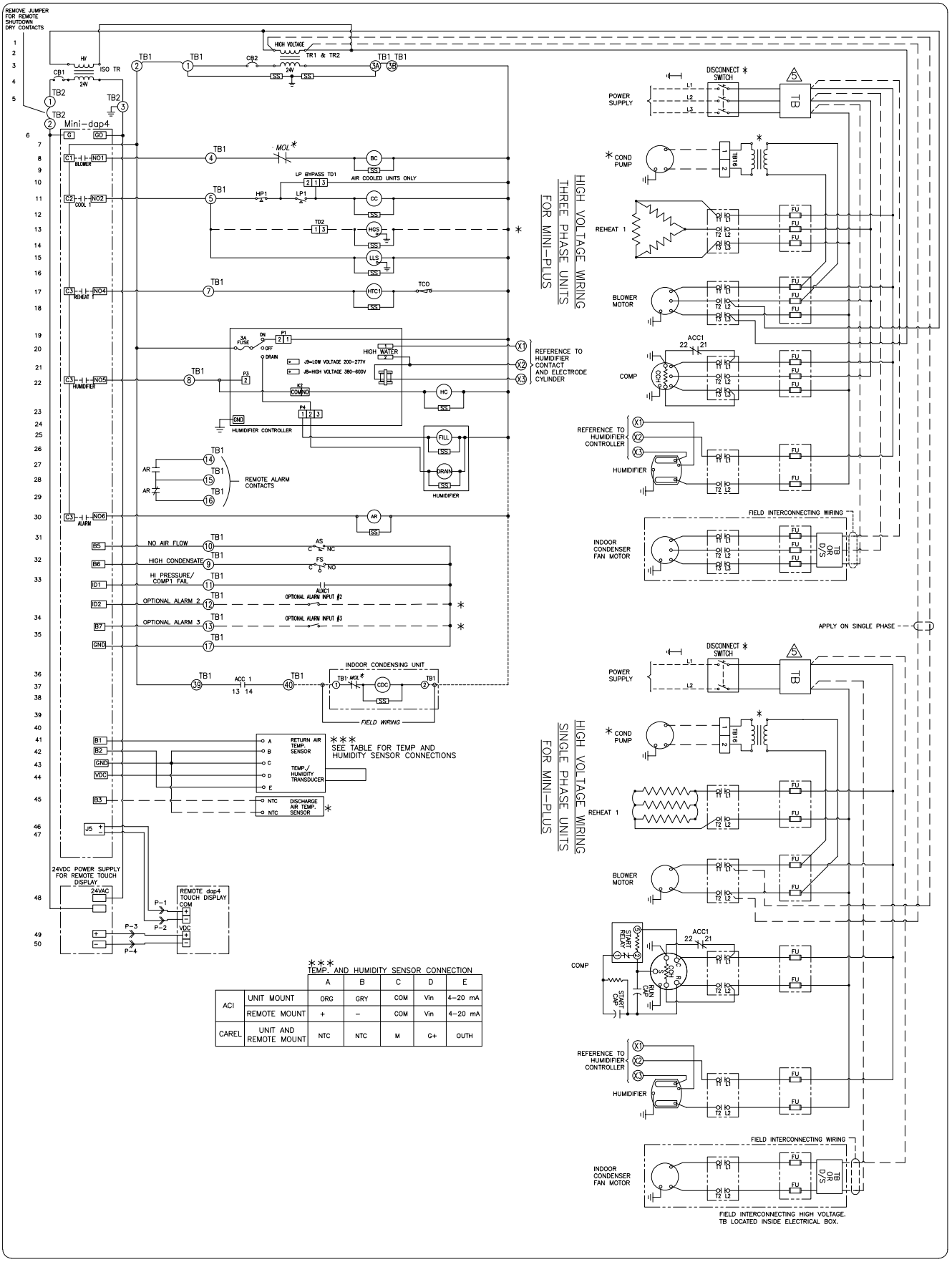

*** TEMP. AND HUMIDITY SENSOR CONNECTION

		A	B	C	D	E
ACI	UNIT MOUNT	ORG	GRY	COM	Vin	4–20 mA
	REMOTE MOUNT	+	–	COM	Vin	4–20 mA
CAREL	UNIT AND REMOTE MOUNT	NTC	NTC	M	G+	OUTH

PANEL LEGEND

ACC	=	AUXILIARY COMPRESSOR CONTACT
AR	=	ALARM RELAY
AUXC	=	AUXILIARY CONTACT ON COMPRESSOR
BC	=	BLOWER CONTACTOR
CB	=	CIRCUIT BREAKER
CC	=	COMPRESSOR CONTACTOR
CCH	=	CRANKCASE HEATER
CDC	=	CONDENSER MOTOR CONTACTOR
dap4	=	DATA ALARM PROCESSOR 4
FU	=	FUSE
FS	=	FLOAT SWITCH
HC	=	HUMIDIFIER CONTACTOR
HGS	=	HOT GAS SOLENOID
HP	=	HIGH PRESSURE CUTOUT
HTC	=	REHEATER CONTACTOR
LLS	=	LIQUID LINE SOLENOID
LP	=	LOW PRESSURE CUTOUT
MOL	=	MOTOR OVERLOAD SWITCH
SS	=	SURGE SUPPRESSOR
TB	=	TERMINAL BLOCK
TCO	=	THERMAL CUTOUT
TD	=	TIME DELAY
TR	=	TRANSFORMER
⊗	=	TERMINAL BLOCK NO.
- - -	=	FIELD WIRING (18AWG OR BETTER)
— —	=	OPTIONAL WIRING
*	=	OPTIONAL COMPONENTS.
***	=	TEMP. AND HUMIDITY SENSOR CONNECTION TABLE
5	=	TB MAY BE OMITTED WHEN DISCONNECT SWITCH IS USED

© Copyright 2017 Data Aire, Inc.

dataaire
230 W. BLUERIDGE AVE. ORANGE, CA. 92865

DWG TITLE:
MINI & MINI-PLUS
WITH INDOOR CONDENSER
WITH MINI dap4 PANEL

JOB NO:
PROJECT NO: DAMS909XY
OPTION:
DIAGRAM NO: DAM-S-909 XY

DRAWN BY: M. COCHRAN
CHECKED BY: F. BELTRAN
EFFECTIVITY DATE: 11-10-2017
REVISION: D